BROWARD COUNTY PUBLIC WORKS DEPARTMENT
WATER & WASTEWATER SERVICES ENGINEERING DIVISION 2555 WEST COPANS ROAD POMPANO BEACH, FL 33069 PHONE NO. 954-831-0745 FAX: 954-831-0925

STANDARD DETAIL

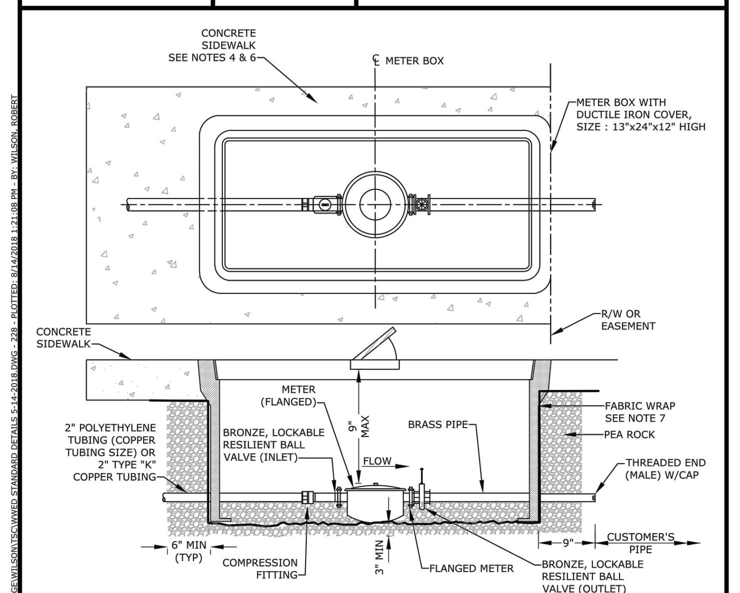

1. ALL STRUCTURES TO BE TRAFFIC BEARING TYPE.
2. CURVE IN SERVICE LINE SHALL BE AS CLOSE TO METER BOX AS PRACTICAL, WITH A MINIMUM RADIUS SHALL BE 21" FOR 2" TUBING.
3. ALL METERS WILL BE SUPPLIED AND INSTALLED BY WWS. METERS ARE FLANGED.
4. WHEN SIDEWALKS ARE PRESENT, OR PLANNED FOR IN THE R/W, THE BACK EDGE OF THE METER BOX SHALL LINE UP WITH THE BACK EDGE OF THE SIDEWALK.
5. METER SHALL BE CENTERED IN BOX DIRECTLY UNDER THE ACCESS LID.
6. WHEN THERE ARE NO SIDEWALKS, CONSTRUCT 6" WIDE x 6" THICK CONCRETE COLLAR AT GRADE.
7. AT BOTH PIPE PENETRATIONS THROUGH THE FABRIC WRAP, THE FABRIC SHALL BE PULLED TIGHT AROUND THE PIPE AND SECURED WITH TWO GRADE 316 STAINLESS STEEL HOSE CLAMPS TO PROVIDE A TIGHT SEAL AROUND PIPE.

METER SIZE	LAYING LENGTH (IN)	HEIGHT (IN)
1 ½"	13	6 ⅞"
2"	17	7 ¹⁷⁄₃₂"

REPLACES FORMER DWG NO.3C	WATER METER INSTALLATION FOR 1 ½" OR 2" METERS	FIGURE 228
REVISED 5/14/2018		

M:\PLANNING AND DEVELOPMENT SECTION\SHARED DATA STORAGE\WILSON\TSC\WWED STANDARD DETAILS 5-14-2018.DWG - 228 - PLOTTED: 8/14/2018 1:21:08 PM - BY: WILSON, ROBERT

BROWARD COUNTY PUBLIC WORKS DEPARTMENT
WATER & WASTEWATER SERVICES ENGINEERING DIVISION 2555 WEST COPANS ROAD POMPANO BEACH, FL 33069 PHONE NO. 954-831-0745 FAX: 954-831-0925
STANDARD DETAIL

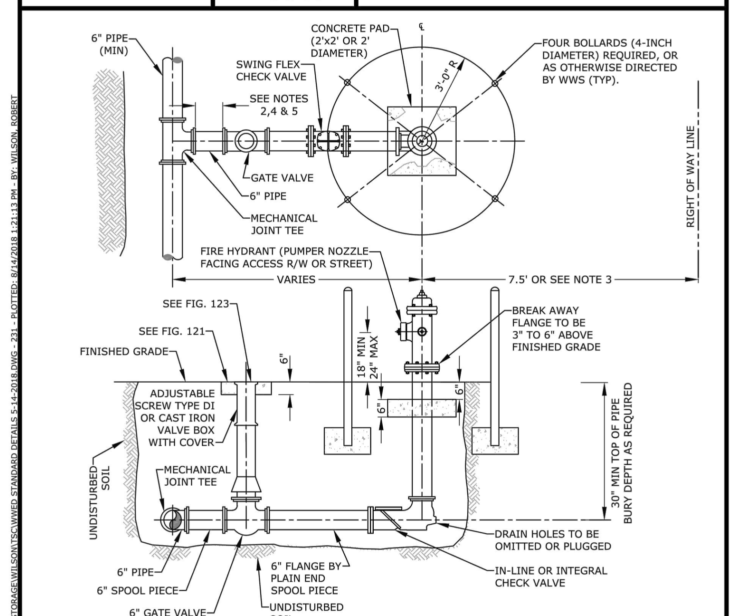

1. HYDRANT COATED WITH OSHA SAFETY YELLOW REFLECTIVE PAINT.
2. USE RESTRAINED JOINTS FOR THE ENTIRE ASSEMBLY SHOWN.
3. HYDRANT SET BACK SHALL CONFORM TO FDOT AND BCHCED REQUIREMENTS, WHERE APPLICABLE.
4. GATE VALVE IS NORMALLY LOCATED NEXT TO TEE.
5. IF DISTANCE FROM MAIN LINE TO FIRE HYDRANT IS GREATER THAN 20 FEET ANOTHER GATE VALVE WILL BE PROVIDED CLOSE TO THE HYDRANT. THIS SECOND VALVE SHALL BE INSTALLED WITHIN 5' OF THE FIRE HYDRANT. CHECK VALVE SHALL BE WITHIN 3' OF FIRE HYDRANT UNLESS CHECK VALVE INTEGRAL TO HYDRANT ASSEMBLY.
6. HYDRANT FEED PIPE MAY BE TAPPED FOR A SERVICE LINE UPSTREAM OF THE ISOLATION GATE VALVE.
7. A BLUE RAISED REFLECTIVE PAVEMENT MARKER SHALL BE PLACED AT THE CENTER LINE OF THE OUTSIDE ROADWAY LANE TO IDENTIFY THE FIRE HYDRANT LOCATION.

REPLACES FORMER DWG NO.8	FIRE HYDRANT INSTALLATION	FIGURE 231
REVISED 5/14/2018		

M:\PLANNING AND DEVELOPMENT SECTION\SHARED DATA STORAGE\WILSON\TSC\WWED STANDARD DETAILS 5-14-2018.DWG - 231 - PLOTTED: 8/14/2018 1:21:13 PM - BY: WILSON, ROBERT

BROWARD COUNTY PUBLIC WORKS DEPARTMENT
WATER & WASTEWATER SERVICES ENGINEERING DIVISION 2555 WEST COPANS ROAD POMPANO BEACH, FL 33069 PHONE NO. 954-831-0745 FAX: 954-831-0925
STANDARD DETAIL

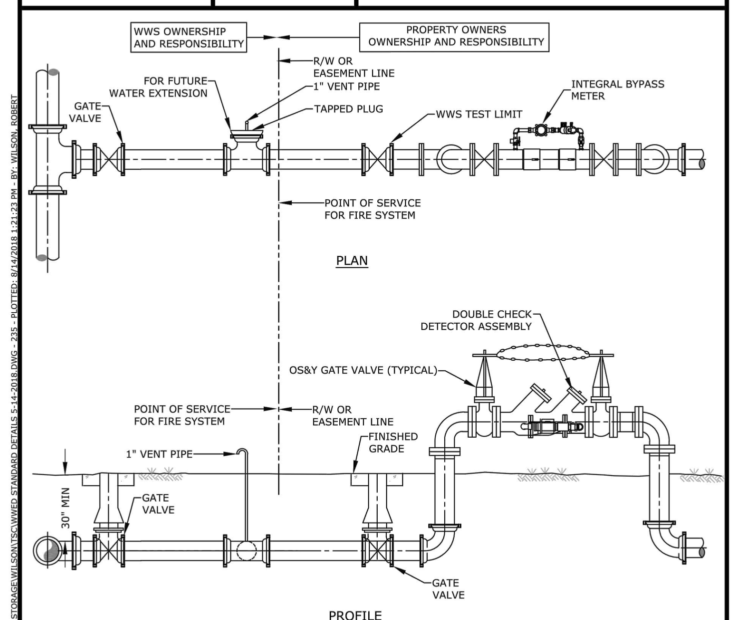

1. THE DOUBLE CHECK DETECTOR ASSEMBLY SHALL BE PRIVATELY OWNED BY PROPERTY OWNER. WWS WILL ONLY MAINTAIN THE BYPASS METER.
2. FIRE SYSTEM TO BE CONSTRUCTED/TESTED IN ACCORDANCE WITH NFPA STDS. & ALL APPLICABLE CODES.
3. 1" VENT PIPE TO BE REMOVED AFTER WWS APPROVAL.
4. INTEGRAL BYPASS METER MUST COME WITH A RED REGISTER CAP METER.
5. PROVIDE RED POLYURETHANE COATING.

DEDICATED FIRE SYSTEM

REPLACES FORMER DWG NO.9A	TYPE 1 PRIVATE FIRE PROTECTION 4", 6" AND 8" DIAMETER CONNECTION	FIGURE 235
REVISED 5/14/2018		

M:\PLANNING AND DEVELOPMENT SECTION\SHARED DATA STORAGE\WILSON\TSC\WWED STANDARD DETAILS 5-14-2018.DWG - 235 - PLOTTED: 8/14/2018 1:21:23 PM - BY: WILSON, ROBERT

BROWARD COUNTY PUBLIC WORKS DEPARTMENT
WATER & WASTEWATER SERVICES ENGINEERING DIVISION 2555 WEST COPANS ROAD POMPANO BEACH, FL 33069 PHONE NO. 954-831-0745 FAX: 954-831-0925
STANDARD DETAIL

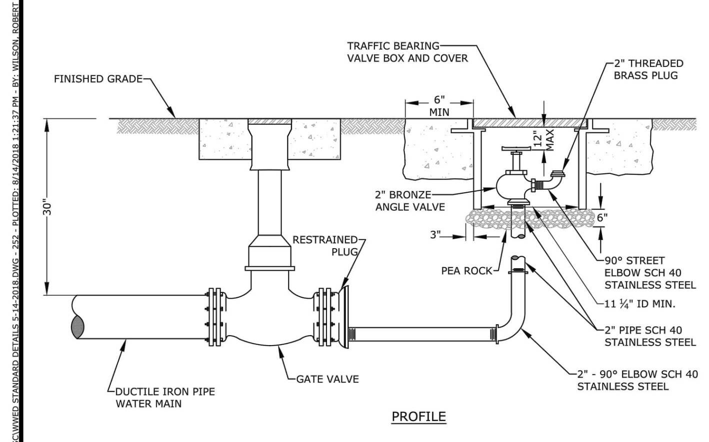

1. 2" TAP IN BOTTOM OF PLUG.
2. USE RESTRAINED JOINT PIPE.
3. IN GRASS AREA USE CONCRETE COLLARS, 6" THICK.

REPLACES FORMER DWG NO.5A	MANUAL BLOW OFF	FIGURE 252
REVISED 5/14/2018		

M:\PLANNING AND DEVELOPMENT SECTION\SHARED DATA STORAGE\WILSON\TSC\WWED STANDARD DETAILS 5-14-2018.DWG - 252 - PLOTTED: 8/14/2018 1:21:37 PM - BY: WILSON, ROBERT

BROWARD COUNTY PUBLIC WORKS DEPARTMENT
WATER & WASTEWATER SERVICES ENGINEERING DIVISION 2555 WEST COPANS ROAD POMPANO BEACH, FL 33069 PHONE NO. 954-831-0745 FAX: 954-831-0925
STANDARD DETAIL

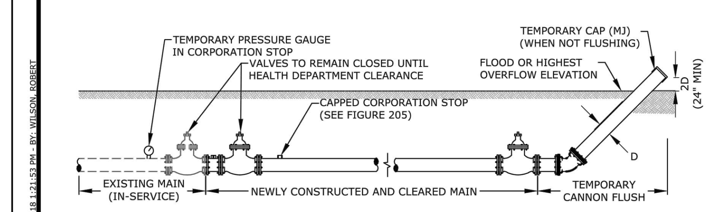

NOTES:

1. UPON COMPLETION OF THE PIPE INSTALLATION FOR ANY SECTION, ALL NEW WATER MAINS SHALL BE CANNON FLUSHED TO REMOVE DIRT AND ANY OTHER FOREIGN MATTER.
2. CANNON FLUSHING OF NEW WATER MAINS SHALL PROCEED ONLY AFTER HEALTH DEPARTMENT CLEARANCE IS RECEIVED.
3. CONTRACTOR IS CAUTIONED THAT GOVERNING AGENCIES OR UTILITIES MAY HAVE REGULATIONS LIMITING OR PROHIBITING DISCHARGE INTO SEWERS, SURFACE WATERS, CANALS, DITCHES AND OTHER CONVEYANCES/RETENTION AREAS. ALL COMPLIANCE WITH GOVERNING AGENCY REQUIREMENTS (INCLUDING PERMITTING, IF REQUIRED) IS THE SOLE RESPONSIBILITY OF THE CONTRACTOR.
4. INSTALL A TEMPORARY 45° BEND AND ASSOCIATED TEMPORARY PIPING AS SHOWN TO DIRECT THE FLUSHING WATER AWAY FROM THE IMMEDIATE WORK AREA AND EXERCISE DUE CARE SO AS TO ENSURE THAT THE WATER USED IN FLUSHING DOES NOT CAUSE A NUISANCE OR INFLICT PROPERTY DAMAGE.
5. CONTRACTOR SHALL INSTALL A TEMPORARY PRESSURE GAUGE AT OR NEAR THE FILL AND FLUSH LOCATION. CONTRACTOR SHALL MONITOR AND MAINTAIN A MINIMUM PRESSURE OF 40 PSI AT ALL TIMES. THE FILL VALVE WILL BE OPENED AND CLOSED SLOWLY TO AVOID RAPID PRESSURE CHANGES IN THE WATER SYSTEM.
6. BENDS AND PIPING SHALL BE THE SAME SIZE OR LARGER AS THE LINE BEING FLUSHED.
7. ALL PIPING SHALL BE MECHANICALLY RESTRAINED IN ACCORDANCE WITH WWS STANDARDS.
8. FLUSHING LOCATIONS ARE TO BE PROPOSED BY CONTRACTOR AND APPROVED BY ENGINEER OF RECORD.
9. PRIOR TO THE ACTUAL LINE FLUSHING OPERATION THE CONTRACTOR SHALL SCHEDULE INTENDED WATER USE WITH WWS.
10. NO EXISTING VALVES SHALL BE OPERATED, EXCEPT BY AUTHORIZED WWS PERSONNEL.
11. FLUSHING SHALL NOT BE ACCOMPLISHED WITHOUT THE ACTUAL PRESENCE OF THE WWS INSPECTOR.
12. AFTER THE WATER MAIN UNDER CONSTRUCTION HAS BEEN SUCCESSFULLY FLUSHED THE CONTRACTOR SHALL REMOVE ALL TEMPORARY FACILITIES AND PROCEED WITH THE REMAINING CONSTRUCTION AS SPECIFIED. CLOSE CORPORATION STOPS AND PLUG/CAP WITH BRASS FITTINGS.

REPLACES FORMER N/A	CANNON FLUSHING FOR NEWLY CONSTRUCTED WATER MAINS	FIGURE 255
REVISED 5/14/2018		

M:\PLANNING AND DEVELOPMENT SECTION\SHARED DATA STORAGE\WILSON\TSC\WWED STANDARD DETAILS 5-14-2018.DWG - 255 - PLOTTED: 8/14/2018 1:21:53 PM - BY: WILSON, ROBERT

BROWARD COUNTY PUBLIC WORKS DEPARTMENT
WATER & WASTEWATER SERVICES ENGINEERING DIVISION 2555 WEST COPANS ROAD POMPANO BEACH, FL 33069 PHONE NO. 954-831-0745 FAX: 954-831-0925
STANDARD DETAIL

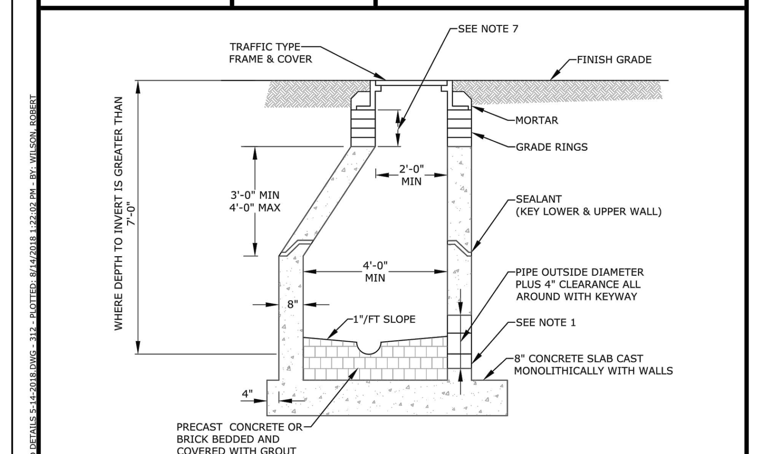

1. MAINTENANCE ACCESS STRUCTURE ADAPTOR COUPLING NEOPRENE BOOT OR APPROVED EQUAL ARE REQUIRED FOR ALL PIPE MATERIAL OR AS APPROVED BY WWS.
2. MAINTENANCE ACCESS STRUCTURE WALLS TO BE SEAL COATED INSIDE AND OUTSIDE WITH 16 MIL. THICKNESS OF COAL TAR EPOXY. THE 1st COAT IS RED AND THE 2nd COAT IS BLACK.
3. LIFT HOLES THROUGH PRECAST SECTIONS PERMITTED PER OSHA REQUIREMENTS.
4. ALL OPENINGS SHALL BE SEALED WITH WATERPROOF EXPANDING GROUT. SEE FIG. 322.
5. A FLOW CHANNEL SHALL BE CONSTRUCTED INSIDE MAINTENANCE ACCESS STRUCTURE TO DIRECT INFLUENT INTO FLOW STREAM.
6. ALL CONCRETE SHALL BE TYPE II CEMENT, MEETING LATEST ASTM REQUIREMENTS AND PROVIDED WITH LABORATORY CERTIFICATION ON PRECAST STRUCTURES.
7. THE CHIMNEY AREA SHALL BE MINIMUM OF 4" AND A MAXIMUM OF 12" IN HEIGHT. A MINIMUM OF 3 GRADE RINGS SHALL BE INSTALLED. SET IN 2 STRIPS OF BUTYL JOINT SEALANT STRIPS ON EACH SEALING FACE.
8. SET MAINTENANCE ACCESS STRUCTURE FRAME ON 2 STRIPS OF BUTYL JOINT SEALANT STRIPS PLUS A BED OF PORTLAND CEMENT AND SILICA SAND. APPLY MORTAR ON INSIDE AND OUTSIDE BUTYL JOINT SEALANT.
9. APPLY MORTAR COATING TO INSIDE AND OUTSIDE OF CHIMNEY. BRING MORTAR UP AND OVER FRAME.

REPLACES FORMER DWG NO.13A	PRECAST MAINTENANCE ACCESS STRUCTURE	312
REVISED 5/14/2018		

M:\PLANNING AND DEVELOPMENT SECTION\SHARED DATA STORAGE\WILSON\TSC\WWED STANDARD DETAILS 5-14-2018.DWG - 312 - PLOTTED: 8/14/2018 1:22:02 PM - BY: WILSON, ROBERT

BROWARD COUNTY PUBLIC WORKS DEPARTMENT
WATER & WASTEWATER SERVICES ENGINEERING DIVISION 2555 WEST COPANS ROAD POMPANO BEACH, FL 33069 PHONE NO. 954-831-0745 FAX: 954-831-0925
STANDARD DETAIL

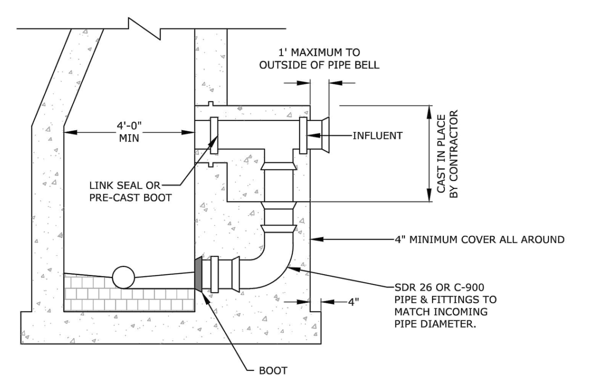

1. THE MANUFACTURER'S PORTION OF THE CONCRETE ENCASEMENT FOR THE DROP CONNECTION SHALL BE POURED INTEGRALLY WITH BOTH THE MAINTENANCE ACCESS STRUCTURE SLAB AND WALL.
2. DROP CONNECTIONS SHALL BE REQUIRED WHENEVER AN INFLUENT SEWER IS LOCATED TWO (2) FEET OR MORE ABOVE THE MAIN INVERT CHANNEL.
3. ALL REQUIREMENTS FOR PRECAST MAINTENANCE ACCESS STRUCTURE WITHOUT DROP CONNECTIONS WILL ALSO APPLY TO PRECAST MAINTENANCE ACCESS STRUCTURE WITH DROP CONNECTIONS. SEE PRECAST MAINTENANCE ACCESS STRUCTURE STANDARD DETAIL FOR OTHER REQUIREMENTS.
4. ALL PIPE TO BE SAME DIAMETER AS INFLUENT SEWER MAIN.

REPLACES FORMER DWG NO.13C	PRECAST MAINTENANCE ACCESS STRUCTURE DROP CONNECTION	FIGURE 313
REVISED 5/14/2018		

M:\PLANNING AND DEVELOPMENT SECTION\SHARED DATA STORAGE\WILSON\TSC\WWED STANDARD DETAILS 5-14-2018.DWG - 313 - PLOTTED: 8/14/2018 1:22:07 PM - BY: WILSON, ROBERT

BROWARD COUNTY PUBLIC WORKS DEPARTMENT
WATER & WASTEWATER SERVICES ENGINEERING DIVISION 2555 WEST COPANS ROAD POMPANO BEACH, FL 33069 PHONE NO. 954-831-0745 FAX: 954-831-0925
STANDARD DETAIL

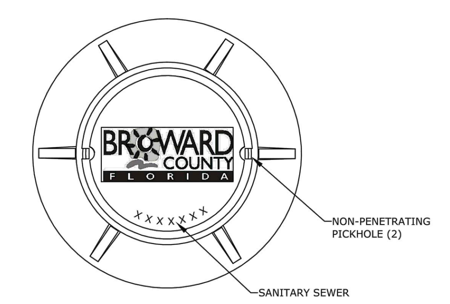

REPLACES FORMER DWG NO.15A	GRAVITY SEWER MAINTENANCE ACCESS STRUCTURE COVER	FIGURE 315
REVISED 5/14/2018		

M:\PLANNING AND DEVELOPMENT SECTION\SHARED DATA STORAGE\WILSON\TSC\WWED STANDARD DETAILS 5-14-2018.DWG - 315 - PLOTTED: 8/14/2018 1:22:17 PM - BY: WILSON, ROBERT

BROWARD COUNTY PUBLIC WORKS DEPARTMENT
WATER & WASTEWATER SERVICES ENGINEERING DIVISION 2555 WEST COPANS ROAD POMPANO BEACH, FL 33069 PHONE NO. 954-831-0745 FAX: 954-831-0925
STANDARD DETAIL

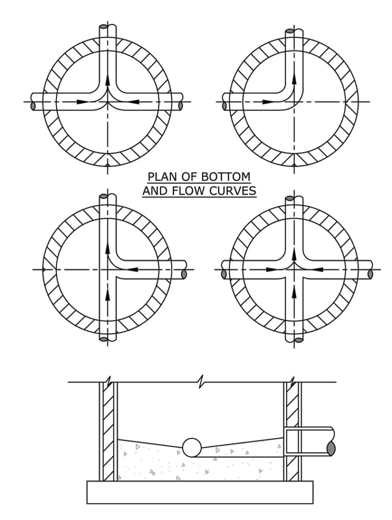

1. PROVIDE SPILLWAY FOR SMOOTH FLOW BETWEEN PIPES WITH DIFFERENT INVERT ELEVATIONS.
2. SLOPE MAINTENANCE ACCESS STRUCTURE SHELF 1"/FT MAINTENANCE ACCESS STRUCTURE WALL TO CHANNEL.
3. INVERT CHANNEL TO BE CONSTRUCTED FOR SMOOTH FLOW WITH NO OBSTRUCTIONS.
4. CHANNEL SHALL BE PRECAST CONCRETE OR FILLED WITH BRICK COVERED WITH 1" OF MORTAR.

REPLACES FORMER DWG NO.13B	INVERT CHANNEL FLOW DIRECTIONS	FIGURE 318
REVISED 5/14/2018		

M:\PLANNING AND DEVELOPMENT SECTION\SHARED DATA STORAGE\WILSON\TSC\WWED STANDARD DETAILS 5-14-2018.DWG - 318 - PLOTTED: 8/14/2018 1:22:22 PM - BY: WILSON, ROBERT

BROWARD COUNTY PUBLIC WORKS DEPARTMENT
WATER & WASTEWATER SERVICES ENGINEERING DIVISION 2555 WEST COPANS ROAD POMPANO BEACH, FL 33069 PHONE NO. 954-831-0745 FAX: 954-831-0925
STANDARD DETAIL

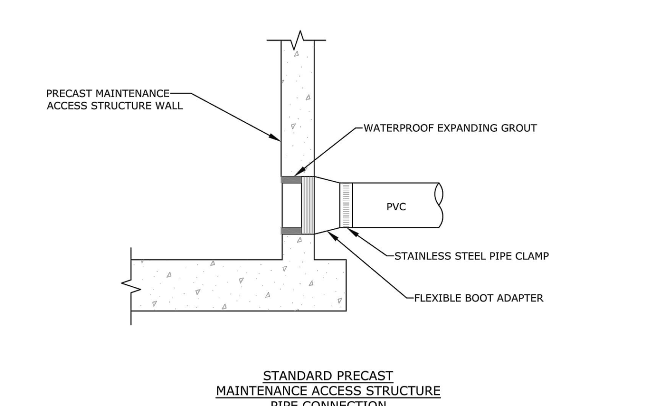

STANDARD PRECAST MAINTENANCE ACCESS STRUCTURE PIPE CONNECTION

WWS MAY APPROVE ALTERNATE WATER TIGHT CONNECTION.

REPLACES FORMER DWG NO.322	MAINTENANCE ACCESS STRUCTURE CONNECTION DETAIL	FIGURE 322
REVISED 5/14/2018		

M:\PLANNING AND DEVELOPMENT SECTION\SHARED DATA STORAGE\WILSON\TSC\WWED STANDARD DETAILS 5-14-2018.DWG - 322 - PLOTTED: 8/14/2018 1:22:27 PM - BY: WILSON, ROBERT

BROWARD COUNTY PUBLIC WORKS DEPARTMENT
WATER & WASTEWATER SERVICES ENGINEERING DIVISION 2555 WEST COPANS ROAD POMPANO BEACH, FL 33069 PHONE NO. 954-831-0745 FAX: 954-831-0925
STANDARD DETAIL

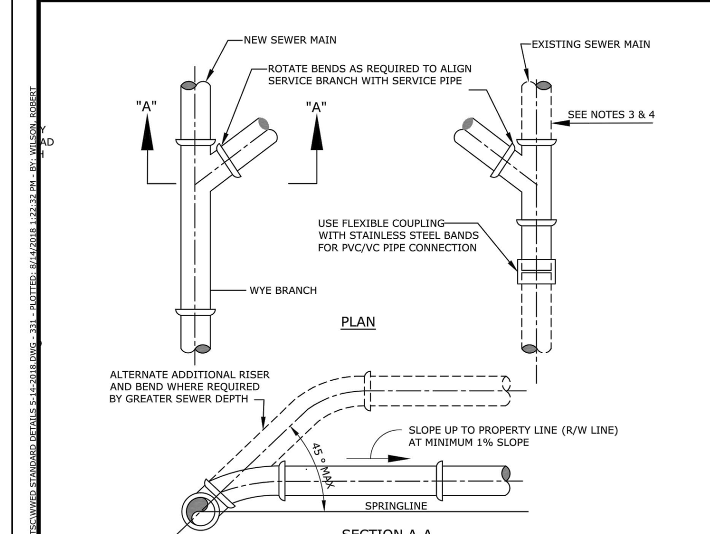

1. SINGLE SERVICE CONNECTIONS SHALL USE 6" SDR 26 PVC PIPE AND FITTINGS.
2. SINGLE SERVICE CONNECTIONS BELOW 12' DEPTH SHALL BE C-900 PVC UNTIL LESS THAN 12 FOOT DEPTH.
2. USE RISER CONNECTIONS WHERE INVERT OF SEWER IS MORE THAN 7'-0" DEEP.
3. WHERE BELL OF WYE AND SPIGOT OF EXISTING MAIN ARE NOT COMPATIBLE, USE A SECOND FLEXIBLE COUPLING.
4. RIGID COUPLINGS MAY BE USED IN LIEU OF FLEXIBLE COUPLINGS.
5. MAINTAIN 36" MINIMUM COVER FROM TOP OF SERVICE TO FINISH GRADE; WHERE NOT TECHNICALLY FEASIBLE CONTACT WWS ENGINEERING.
6. PVC SERVICES SHALL BE INSTALLED IN ACCORDANCE WITH MINIMUM STANDARDS OF THE UNI-BELL HANDBOOK OF PVC PIPE DESIGN AND CONSTRUCTION, LATEST EDITION.

REPLACES FORMER DWG NO.2A	WYE SEWER SERVICE CONNECTION	FIGURE 331
REVISED 5/14/2018		

M:\PLANNING AND DEVELOPMENT SECTION\SHARED DATA STORAGE\WILSON\TSC\WWED STANDARD DETAILS 5-14-2018.DWG - 331 - PLOTTED: 8/14/2018 1:22:32 PM - BY: WILSON, ROBERT

BROWARD COUNTY PUBLIC WORKS DEPARTMENT
WATER & WASTEWATER SERVICES ENGINEERING DIVISION 2555 WEST COPANS ROAD POMPANO BEACH, FL 33069 PHONE NO. 954-831-0745 FAX: 954-831-0925
STANDARD DETAIL

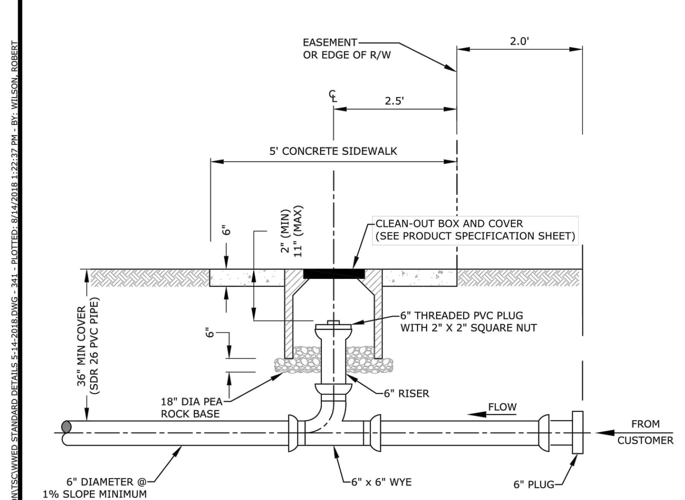

1. THE CLEAN OUT SHALL BE INSTALLED IN THE MIDDLE OF THE SIDEWALK. THIS DIMENSION WILL VARY DEPENDING UPON THE WIDTH OF THE SIDEWALK. 2.5' APPLIES TO 5' SIDEWALK WIDTH. IF SIDEWALKS DO NOT EXIST, THE CLEAN OUT SHALL BE INSTALLED 2.5' FROM THE RIGHT OF WAY LINE.
2. A NEW SECTION OF SIDEWALK SHALL BE POURED AROUND THE CLEAN-OUT BOX WHEN WORKING IN AN AREA WITH EXISTING SIDEWALKS.
3. IN GRASS AREA USE 24"x24" OR 24" DIAMETER CONCRETE COLLAR.

REPLACES FORMER DWG NO.4A	SEWER SERVICE CONNECTION AT PROPERTY LINE OR EASEMENT LINE PROFILE	FIGURE 341
REVISED 5/14/2018		

M:\PLANNING AND DEVELOPMENT SECTION\SHARED DATA STORAGE\WILSON\TSC\WWED STANDARD DETAILS 5-14-2018.DWG - 341 - PLOTTED: 8/14/2018 1:22:37 PM - BY: WILSON, ROBERT

BROWARD COUNTY PUBLIC WORKS DEPARTMENT
WATER & WASTEWATER SERVICES ENGINEERING DIVISION 2555 WEST COPANS ROAD POMPANO BEACH, FL 33069 PHONE NO. 954-831-0745 FAX: 954-831-0925
STANDARD DETAIL

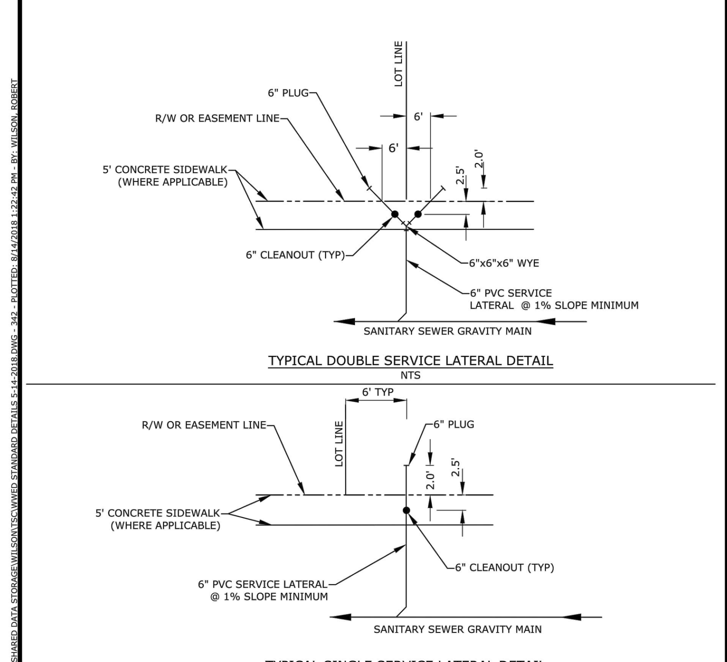

REPLACES FORMER DWG NO.4B	SEWER SERVICE CONNECTION AT PROPERTY LINE OR EASEMENT LINE PLAN	FIGURE 342
REVISED 5/14/2018		

M:\PLANNING AND DEVELOPMENT SECTION\SHARED DATA STORAGE\WILSON\TSC\WWED STANDARD DETAILS 5-14-2018.DWG - 342 - PLOTTED: 8/14/2018 1:22:42 PM - BY: WILSON, ROBERT

URBN DESIGN
696 N.E. 125th STREET
NORTH MIAMI, FL 33161
Phone: 305.720.2079
C.O.A. 33221

CHRISTOPHER PATRICK COLLINS ★ LICENSE No. 73819 ★ STATE OF FLORIDA ★ PROFESSIONAL ENGINEER
CHRISTOPHER COLLINS, P.E. REG-# 73819
5/25/2022

This item has been digitally signed and sealed by Christopher P. Collins, P.E. on the date adjacent to the seal.

Printed copies of this document are not considered signed and sealed and the signature must be verified on any electronics copies.

IMC EQUITY GROUP

Christopher Collins
Digitally signed by Christopher Collins
Date: 2022.07.14 12:32:35 -05'00'

Revision	Date
Revision 6 Comment	
Revision 5 Comment	
Revision 4 Comment	
Revision 3 Comment	
Revision 2 Comment	
Revision 1 Comment	

Designed by:	C.P.C.
Drawn by:	A.T.S.
Checked by:	C.P.C.
Approved by:	C.P.C.
Scale:	N.T.S.
Date:	05/25/2022
Job No.:	I002

©

Plans for

FESTIVAL MARKETPLACE
2900 W SAMPLE ROAD
POMPANO BEACH,
FLORIDA

UTILITY DETAILS

Sheet No.
C-104

Sunshine 811
Call 811 or visit sunshine811.com two full business days before digging to have buried facilities located and marked.
Check positive response codes before you dig

DRC
PZ22-12000027
8/17/2022